## 5V / 12V Switchable Fan Supply

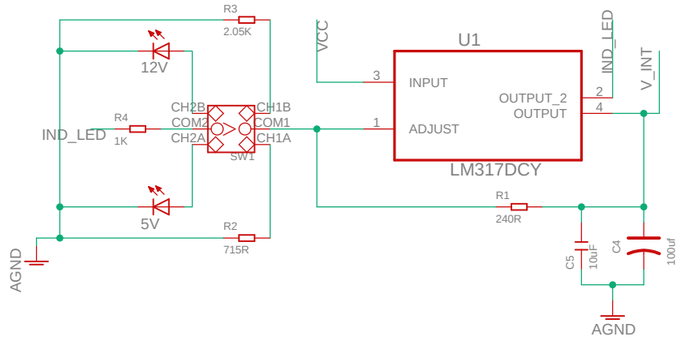


## 5V Ripple Rejected AVR/Piezo Supply

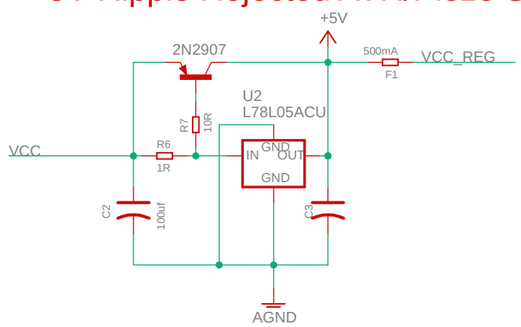


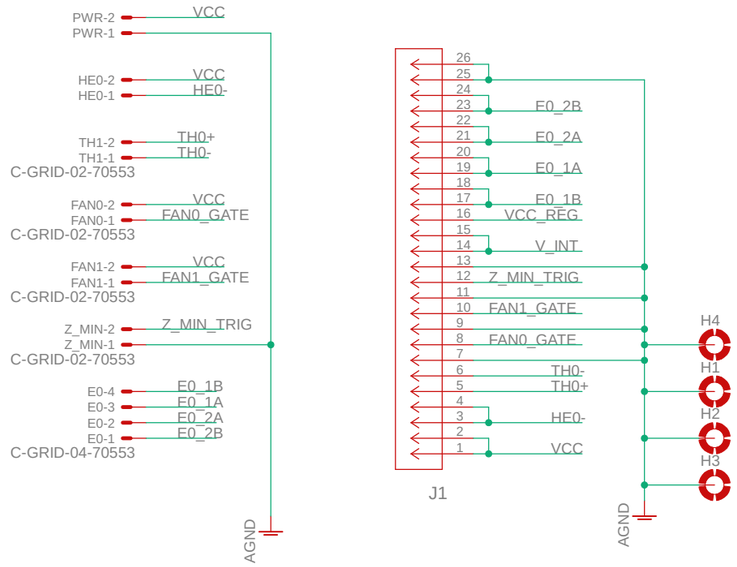


Direct-Extruder-FFC-Breakout_1.0.0

2/13/2019 12:32 PM

Sheet: 1/1